Union Bonnet 2 Valves Manifold

Available from

PARKER HANNIFIN INSTRUMENTATION GROUP CHINA

Product Introduction

Parker Union Bonnet 2 Valves Manifold have been engineered for use at pressures up to 6,000 (414 bar) and temperatures as high as 1,200 °F (649 °C). A non-rotating lower stem helps to extend packing life by removing rotation from the packing area. Stem packing below the threads isolates the thread lubricant from the flow, ensuring adequate lubrication regardless of the media.

Features

- Union bonnet design ensures high integrity seal under severe service applications.
- Packing below the power threads protects thread lubricants from media and isolates the lubricants from the media.
- Stem swivel above the packing eliminates entrapment area and increases packing life.
- 316 stainless steel construction.
- 100% factory tested.

Specifications

Pressure Rating:

6000 psig (414 bar) CWP

Temperature Rating:

PTFE packing:
-65 ℉ to 450 ℉ (-54 ℃ to 232 ℃)

Grafoil® packing:
-65 ℉ to 700 ℉ (-54 ℃ to 371 ℃)

Grafoil® packing with HT option:
-65 ℉ to 1200 ℉ (-54 ℃ to 649 ℃)

Orifice: 11.1mm

Pressure vs. Temperature

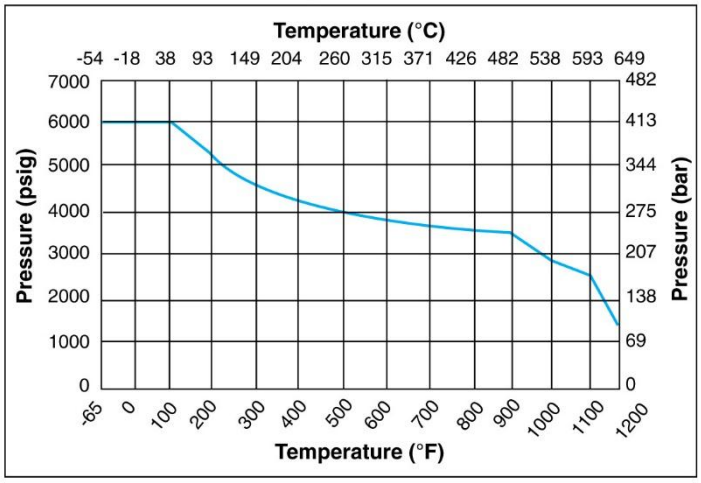

ENGINEERING YOUR SUCCESS.

Material of Union Bonnet

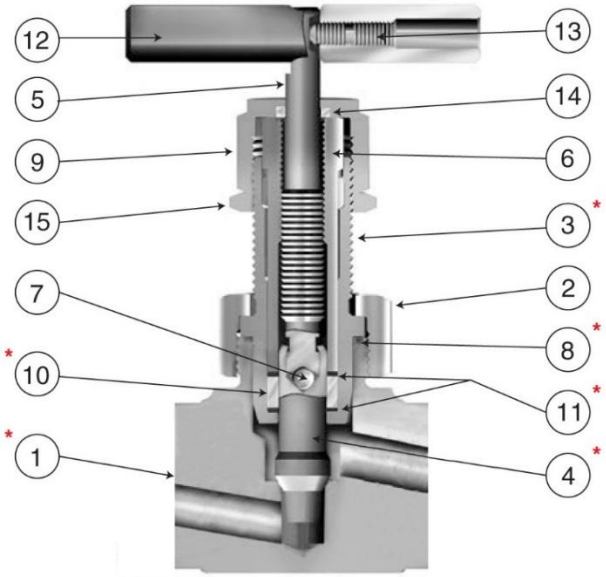

Item #	Description	Material
*1	Body	ASTM A 182, Type F316
2	Bonnet Nut	ASTM A 479, Type 316
*3	Bonnet	ASTM A 479, Type 316
*4	Lower Stem*	ASTM A 564, Type 630
5	Upper Stem	ASTM A 564, Type 630
6	Stem Guide	ASTM A 581, Type 416
7	Ball	440-C Stainless Steel
*8	Bonnet Seal**	Nickel-Chromium-Iron Alloy
9	Packing Nut	ASTM A 479, Type 316
*10	Packing***	Grafoil®
*11	Packing Washer	316 Stainless Steel
12	Handle****	Aluminum
13	Handle Screw	316 Stainless Steel
14	Dust Seal*****	Nylon 6/6
15	Locking Nut	Stainless Steel

* Wetted parts
* Lower Stem material is ASTM A 276 Type 316 with HT option
** Not required on U6 and U12 Series which have metal-to-metal seals
*** Optional PTFE Packing is available
**** Handle material is stainless steel with HT option
***** Dust Seal not available with HT option

Construction Dimensions

M16W-U16LB2V-G-SS-HT

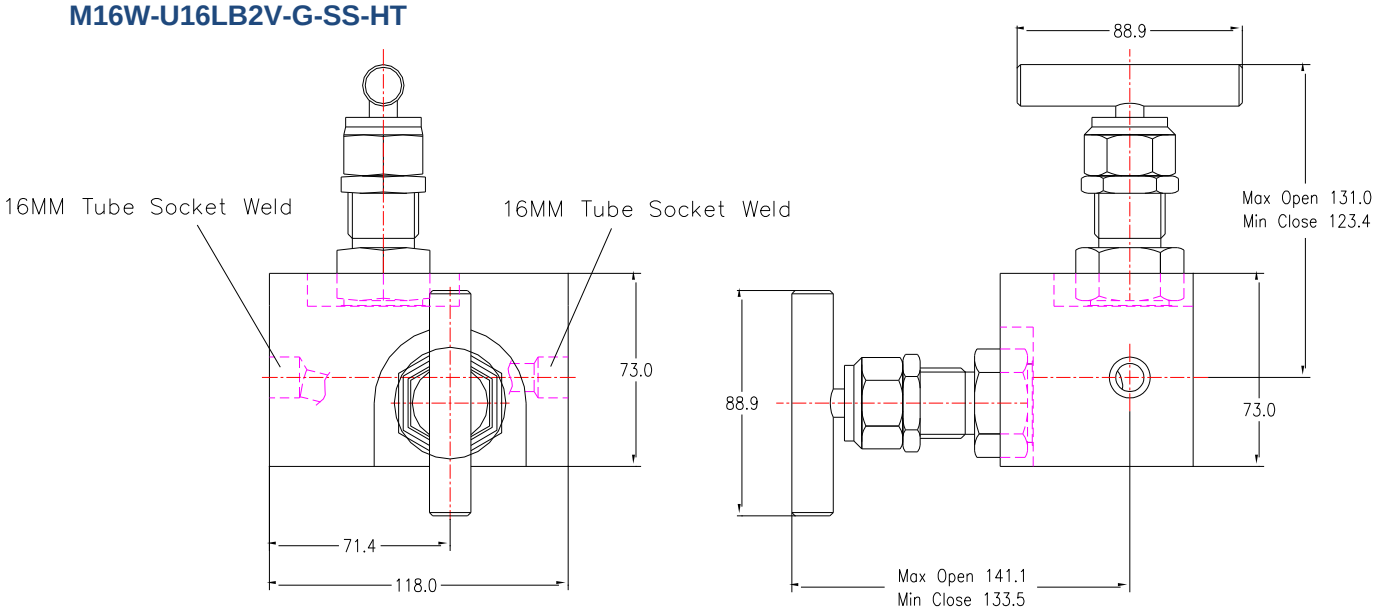

Part Number

Example: M16W-U16LB2V-G-SS-HT

Describes a Union Bonnet 2 valves manifold with 16mm tube socket weld inlet and outlet port, Grafoil® packing, 316 stainless steel construction, for high temperature application.

Contact us:
PARKER HANNIFIN INSTRUMENTATION GROUP CHINA
No. 18 Huashan Road, Xinbei District
Changzhou 213022, Jiangsu, China
Inquiry: Ray.li@parker.com
Tel: (86-519) 89807244